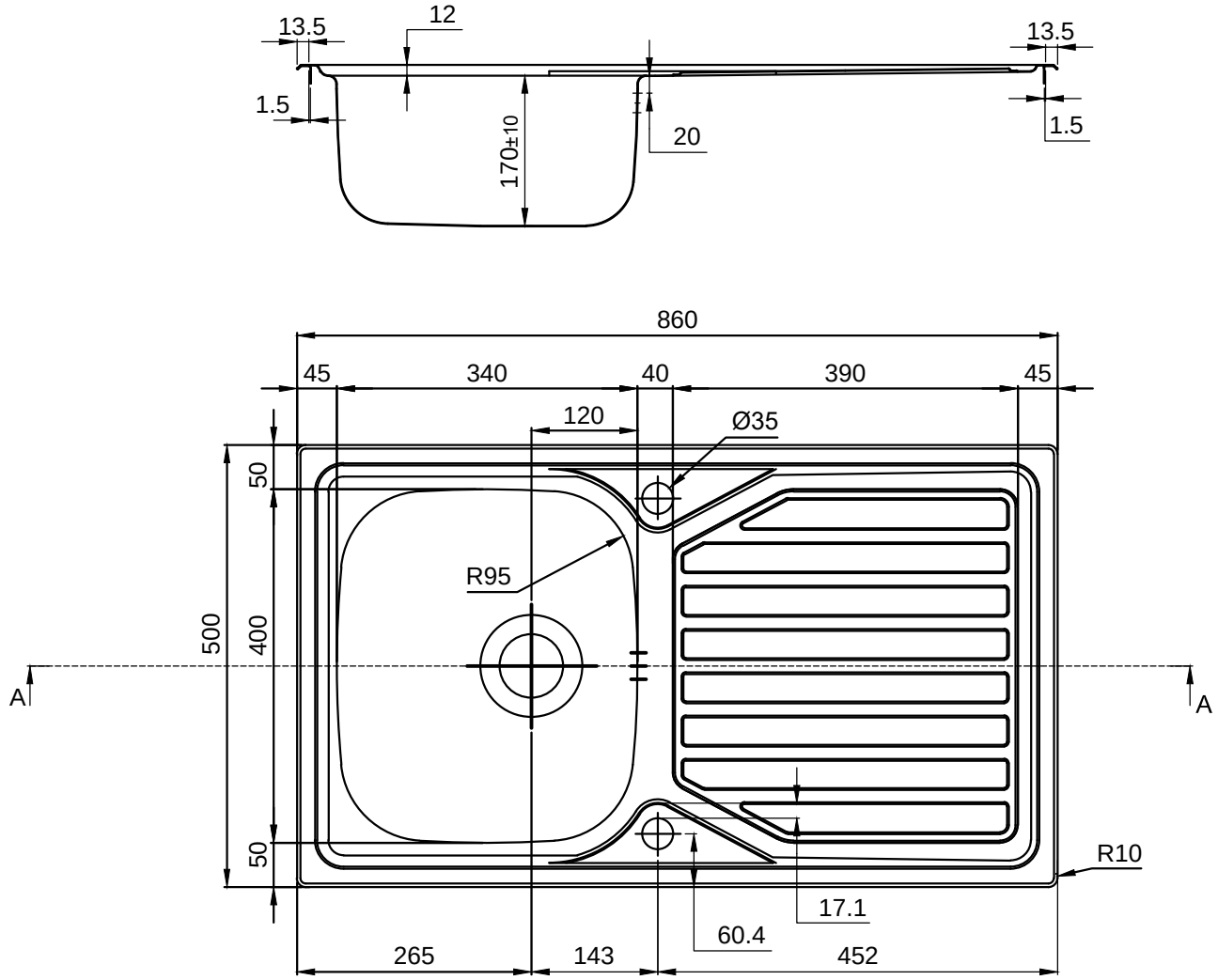
13.5
12
13.5
1.5
170±10
20
1.5
860
45
340
40
390
45
120
Ø35
50
R95
500
400
A
A
50
R10
17.1
60.4
265
143
452