RevNo	Revision note		Date	Signature	Checked

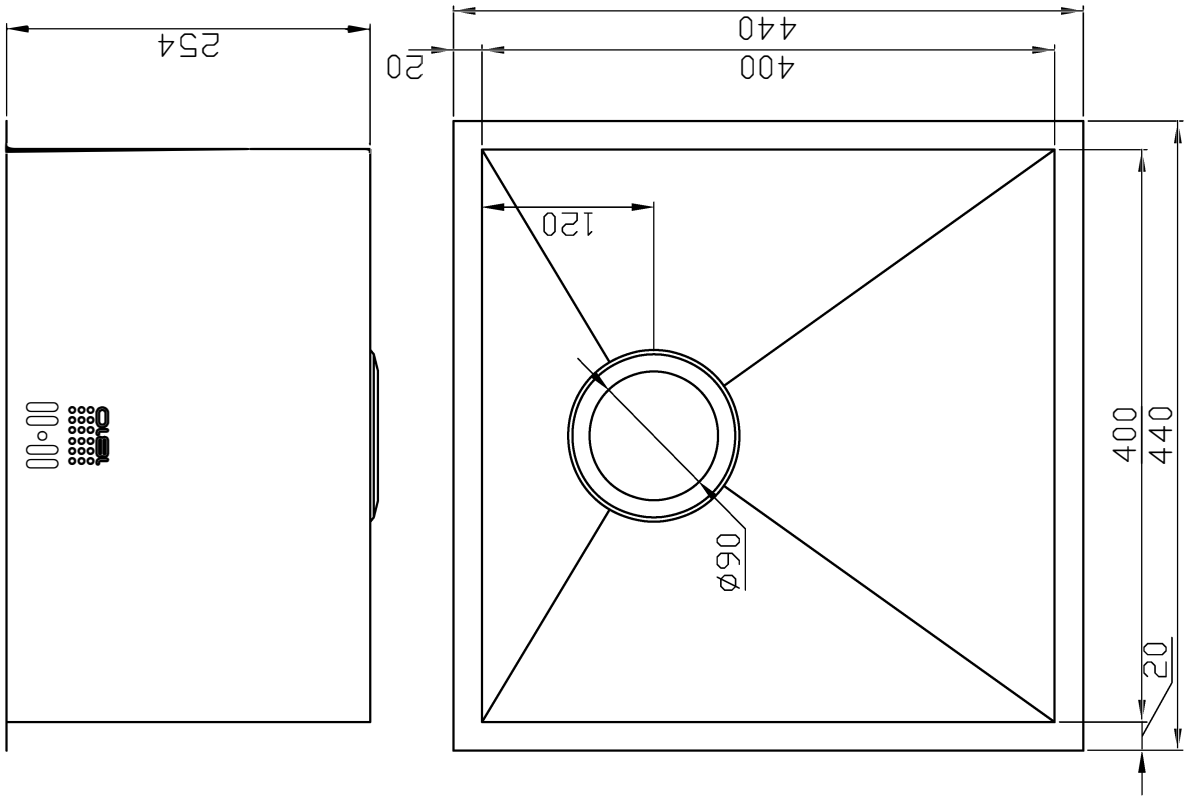

Designed by	Checked by	Approved by - date	Material	Date	Scale
			S/S 304 T=1.2mm	2014-9-28	1:7

The 1810 Company

Stainless Steel Manufacture Factory

DRAWING NO.:	400U DEEP	Edition	Sheet
		0	1/1